SKN-100型包缠机说明书

SKN-100 wrapping machine Instruction

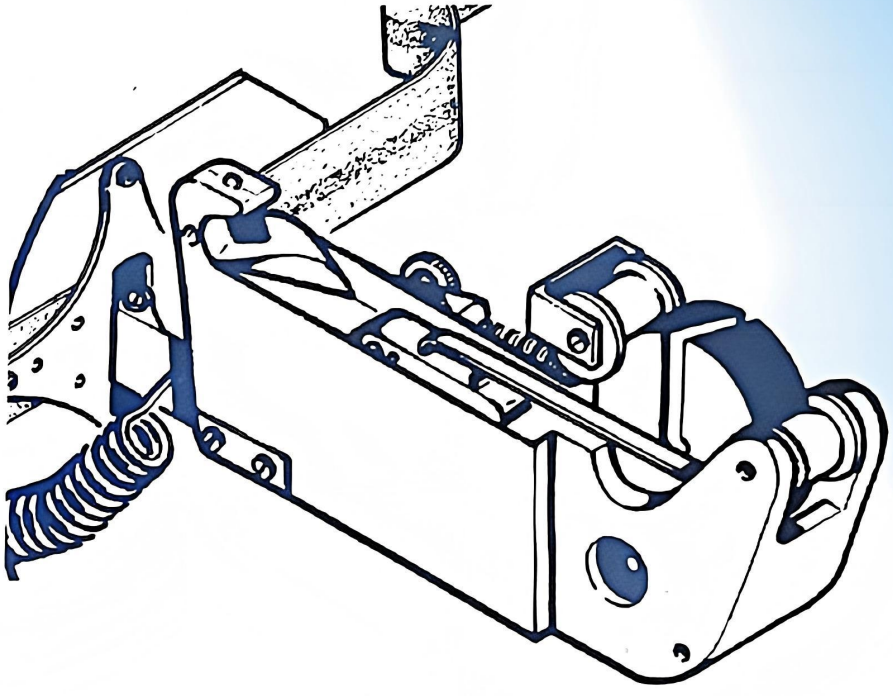

Ningbo Haoyue Textile Tech Co.,Ltd.

No.6 Xinye Road, Free Trade Zone, Ningbo, China

Tel:0086-574-86812271

Tel:0086-574-86812617

Http://nbhaoyue.en.alibaba.com

E-mail: krooris@nb-haoyue.com

WhatsApp:0086 13484252019

Mr Krooris

WhatsApp

SKN-100型
包缠器介绍

SKN-100型包缠器是通过细丝（或纱）缠绕在需要连接的两端重叠纱线（或线绳）上，解决了空气捻接器无法捻接纱线的连接，从而解决客户对特种纱线（或线绳）的无结纱的要求。缠绕处光滑牢固，保证了生产的连续性，大幅提高生产效率。

理论上讲SKN-100型包缠器适用任何纱、线、绳的连接。但是在空气捻接器无法捻接的情况下才使用SKN-100型包缠器。

适用的纱线有人造草坪丝、地毯纱、花式纱线、帘子线、玻璃纤维、石棉等。

SKN-100型包缠器是由充电电池**(14-15V)**来供电的，可以将其固定操作者腰带上使用（标准配置），也可以固定在需要包缠的生产设备旁使用。

绕缠线编号	支数	描述
30	Ne 40	棉
30A	Ne 100	棉
30B	Ne 50	化纤（白）
30C	Den 40	加弹丝（白）
30E	Den 50	单根长丝尼龙 66（透明的）

SKN-100
Wrapping machine/splicer

SKN-100 wrapping machine/splicer wraps the opposed ends with a fine yarn usually of compatible material. In this way, it solves the problem that air splicer can not join some special yarn, thread, and meets the customer's demand for knotless yarn of special material.

Theoretically speaking, SKN-100 wrapping machine applies to any type of yarn, thread and rope. However, we use SKN-100 wrapping machine only in the case that air splicer can not meet the demand.

SKN-100 is applicable to artificial turf filaments, carpet yarn, fancy yarn, cord yarn, glass fiber, asbestos and so on.

SKN-100 wrapping machine is powered by a rechargeable battery **(14-15V)** and is normally worn around the operator's waist (belt).

Yarn number	count	description
30	Ne 40	cotton
30A	Ne 100	cotton
30B	Ne 50	Polyester(white)
30C	Den 40	DTY (white)
30E	Den 50	Monofilament nylon 66 (transparent)

梭芯安装 Spool Installation

1

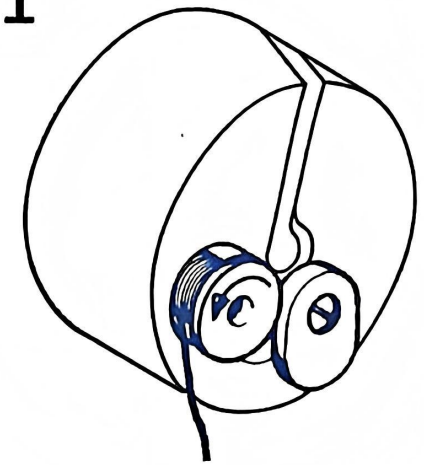

嵌入梭芯
Spool insertion

2

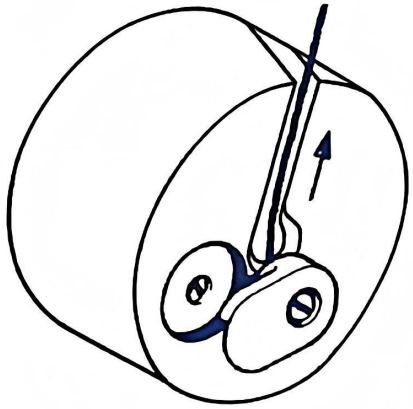

引出梭芯丝（或纱）
并拧上张力装置固定梭芯
Elicit the yarn
Tighten the tension device
to fix the spool

操作示意图 Instruction

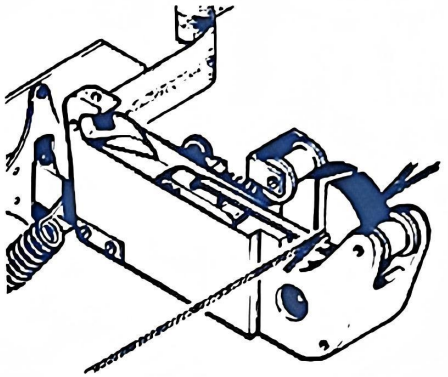

将要连接的纱线尾端拉紧并放入槽内，纱线压力在微型开关杆上操作包缠器

The ends to be joined are inserted into the slot of the splicing wheel, yarn pressure on the micro switch lever operating the splicer.

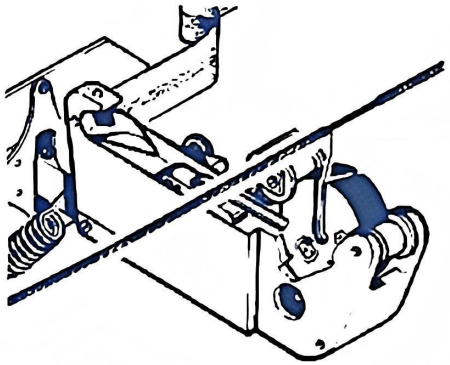

包裹-来回缓慢地移动纱线，使其完全包裹住线尾。

Traverse the yarn slowly in alternate directions, completely covering the tails.

注：移动的速度取决于纱线的特性。例如：对纱线连接强力要求高的，移动速度需缓慢，让其缠绕丝充分包裹在被包缠纱线上，反之对纱线连接强力要求低的而对纱线外观要求高的，可以提高移动速度。

Note: The speed of movement depends on the character of the yarn. If the joint needs to be of high strength, the speed should be slow, so that the yarn can be completely covered. Otherwise, the speed can be improved.

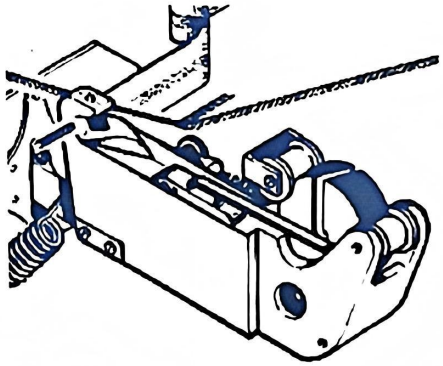

短接头-通过减少包裹的区域和用包缠器上的刀片修剪多余的线尾，可以实现短接头。

A short splice can be achieved by reducing the wrapping zone and trimming the surplus tails by means of the blade mounted on the machine.

配件图 Parts diagram

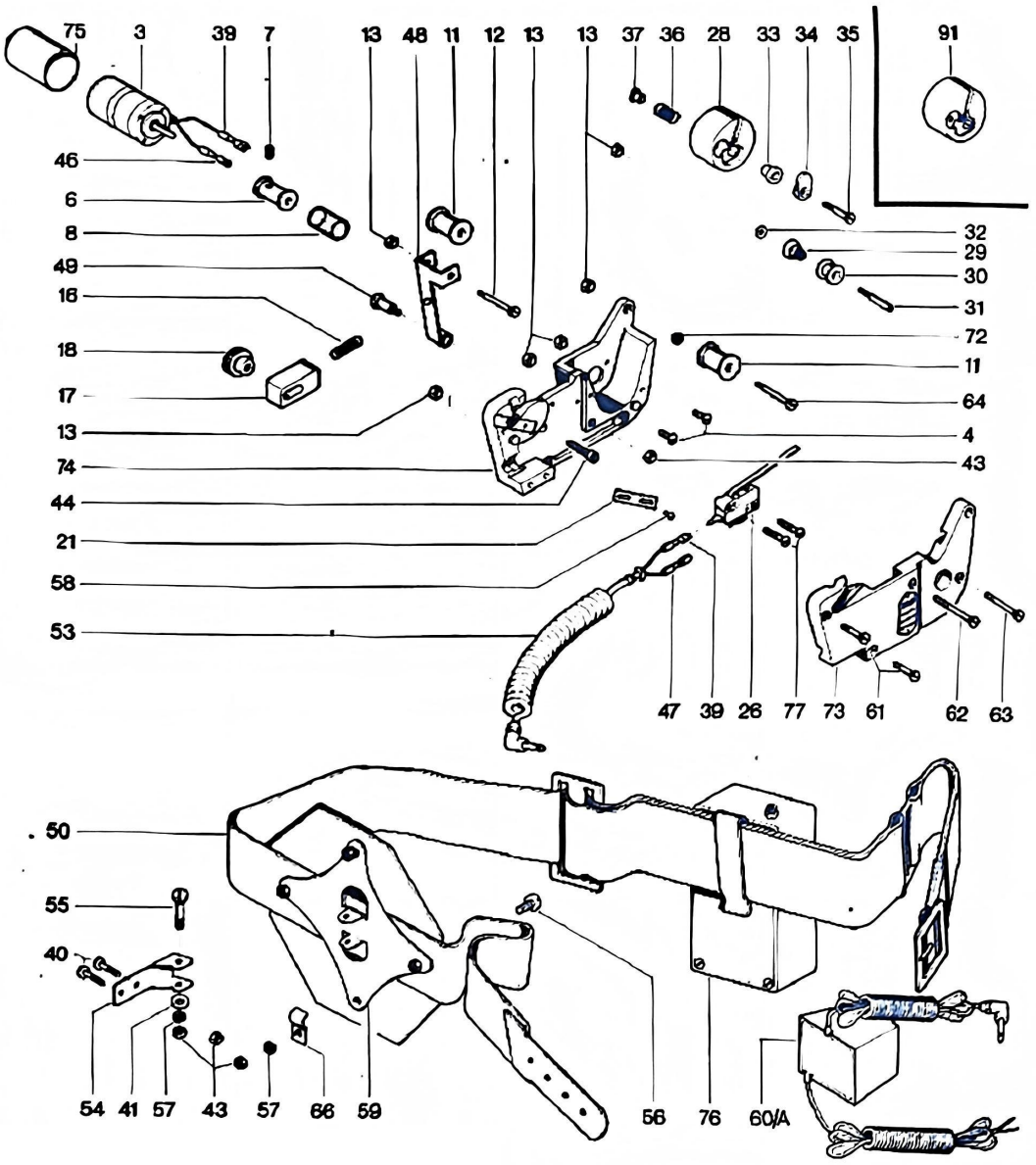

The requirements for the batteries to be purchased are as follows:



The requirements for the batteries to be purchased are as follows:











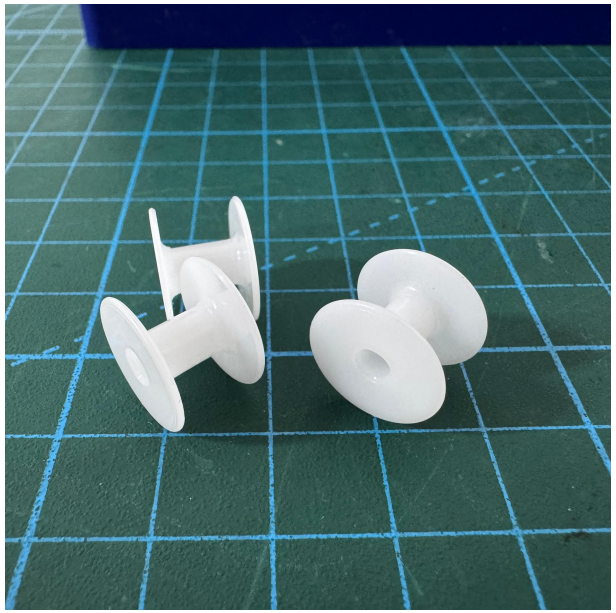

The SKN-100 wrapping machine requires DTY of 50–70D.

We supply the winding machine and spools for you. You may purchase 50–70D DTY and wind the yarn onto the spools with our special winding Machine.